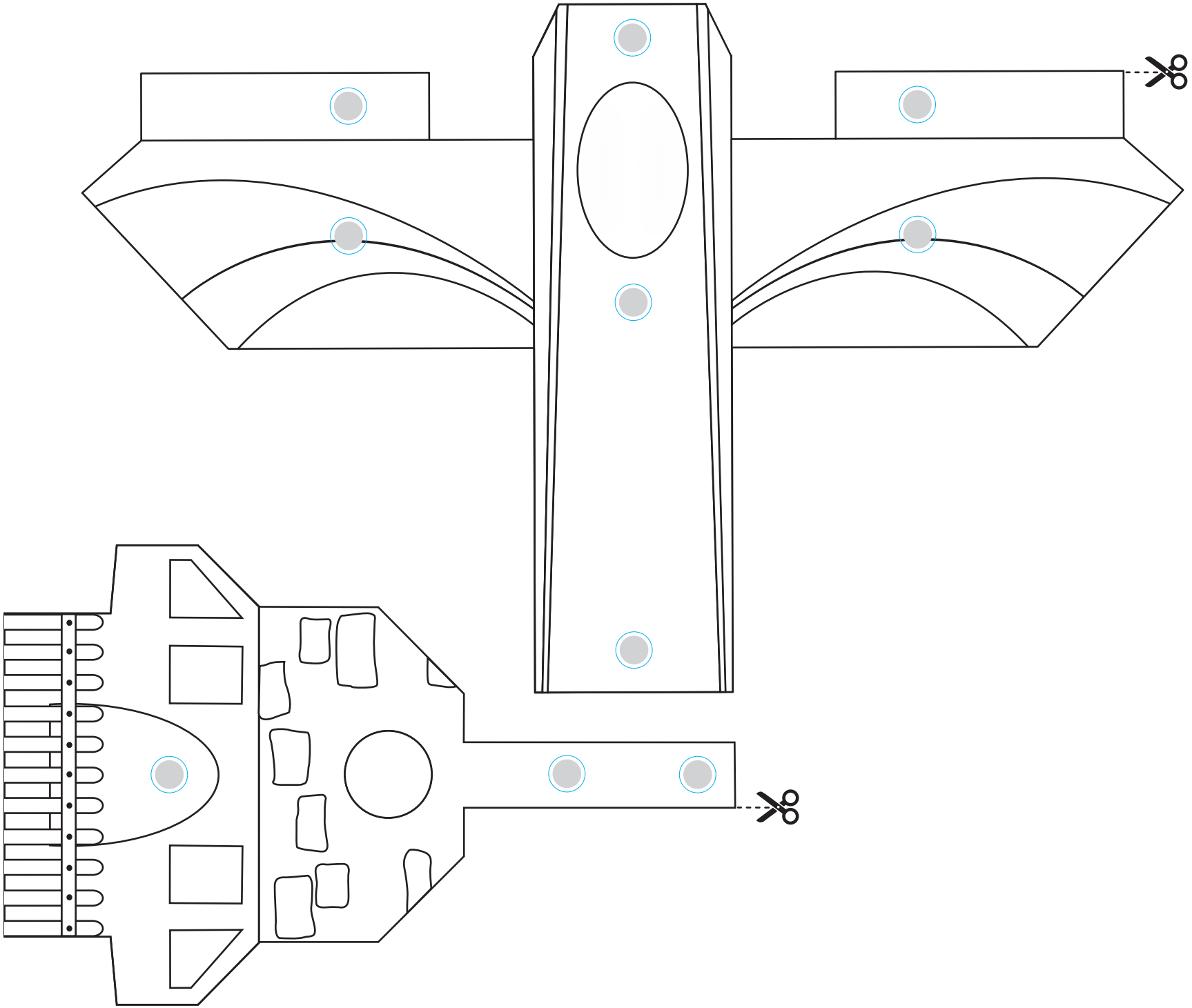

© Copyright Engino-Net Limited - 411550010 / STEAMXF11 & DIYE11

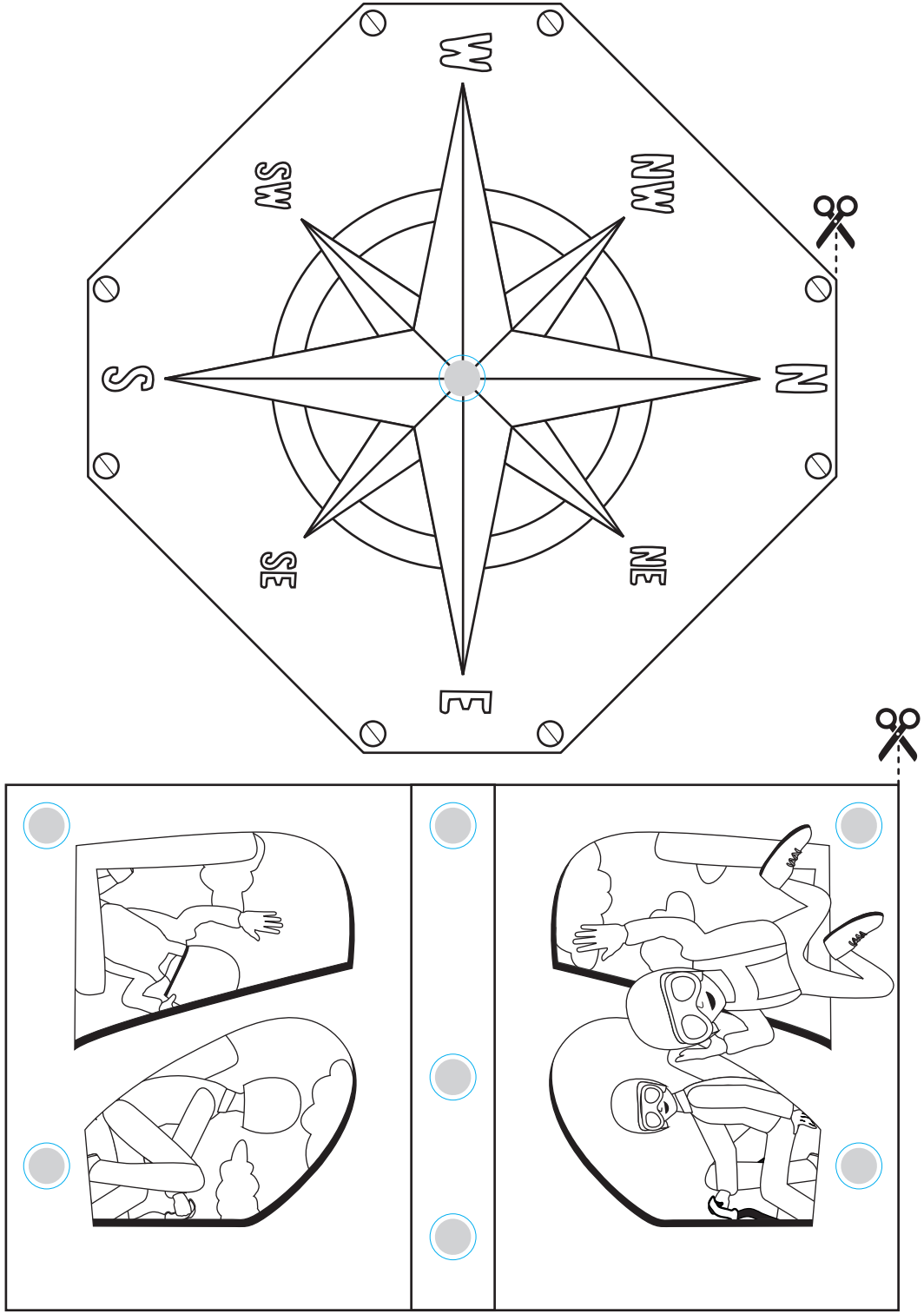

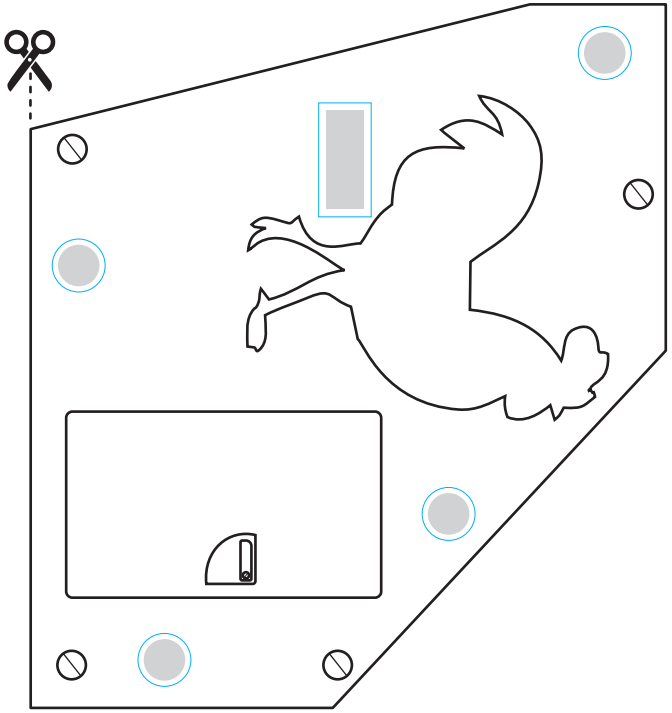

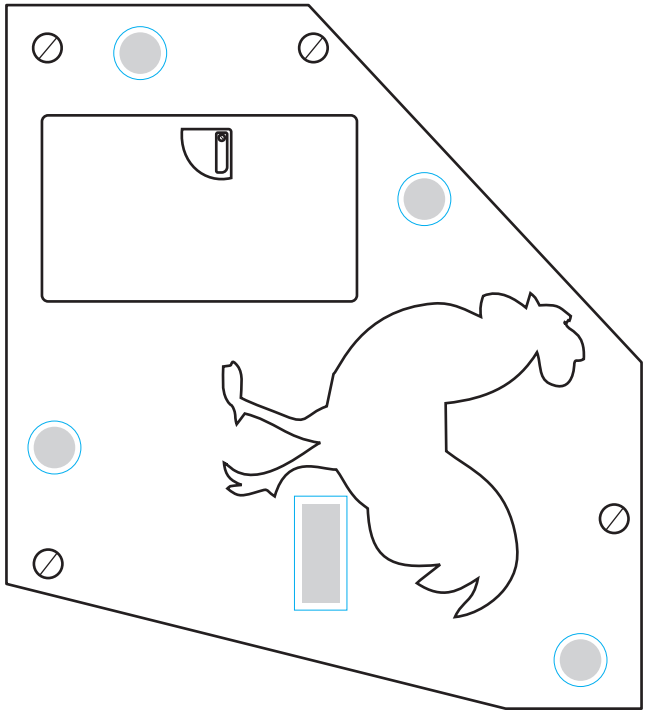

© Copyright Engino-Net Limited - 411560010 / STEAMXF12